# EVAPCO, INC.

| UNIT | MODEL # | SCALE | DWG. # | REV. | DATE | SERIAL # |
|---|---|---|---|---|---|---|
| CLOSED CIRCUIT COOLER | LSC-1000E | NTS | W2241806-ERB-LFHF | | 4/23/2024 | |

NOTES:
1. (M)- FAN MOTOR LOCATION
2. HEAVIEST SECTION IS UPPER SECTION
3. MPT DENOTES MALE PIPE THREAD
   FPT DENOTES FEMALE PIPE THREAD
   BFW DENOTES BEVELED FOR WELDING
4. + UNIT WEIGHT DOES NOT INCLUDE ACCESSORIES (SEE SEPARATE DRAWINGS FOR ACCESSORIES)
5. 3/4" DIA. MOUNTING HOLES. REFER TO RECOMMENDED STEEL SUPPORT DRAWING
6. MAKE-UP WATER PRESSURE-20 psi MIN, 50 psi MAX
7. * - APPROXIMATE DIMENSIONS DO NOT USE FOR PRE-FABRICATION OF CONNECTING PIPING.

Preliminary

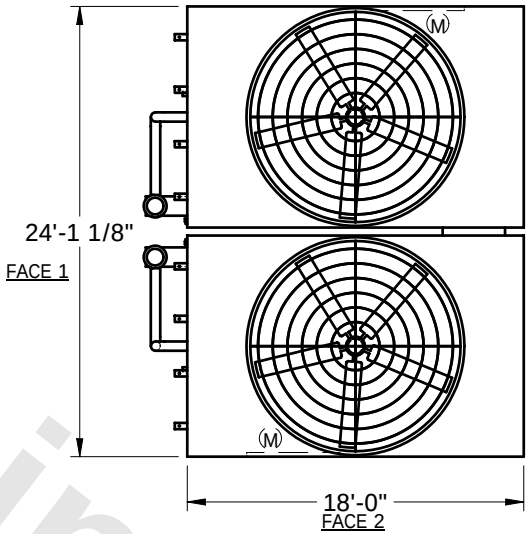


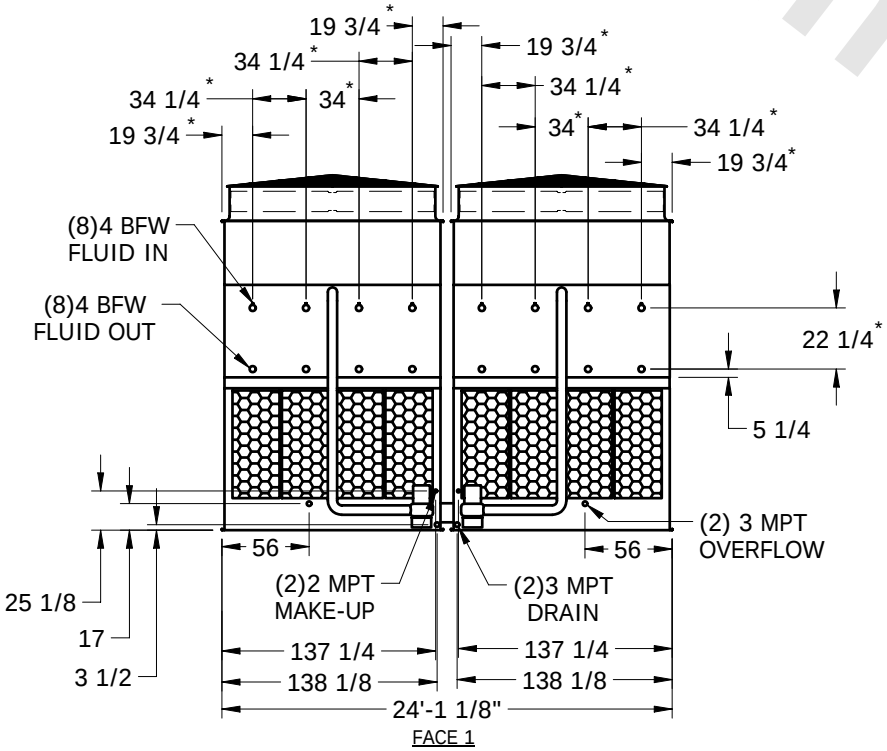


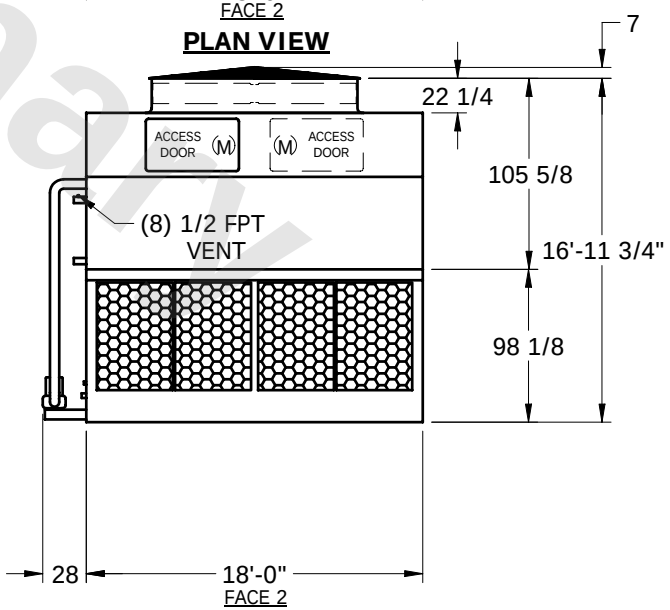


| SHIPPING WEIGHT | OPERATING WEIGHT | HEAVIEST SECTION WEIGHT | NO. OF SHIPPING SECTIONS |
|---|---|---|---|
| 43120 lbs.+ | 69760 lbs. | 17610 lbs. | 4 |